1883967
Country Glen Demilune

Parts List

A.	Top Assembly	1 pc
B.	Front Legs	2 pcs
C.	Back Legs	2 pcs
D.	Allen Head Bolts	8 pcs
E.	Lock Washers	8 pcs
F.	Flat Washers	8 pcs
G.	Allen Head Wrench	1 pc

∗ Please make sure that you have all the parts indicated above before you begin assembly of this item.
∗ This item should be assembled on a soft surface to prevent scratching the finish during assembly.
∗ This item may require periodic tightening.

Hardware Illustrations

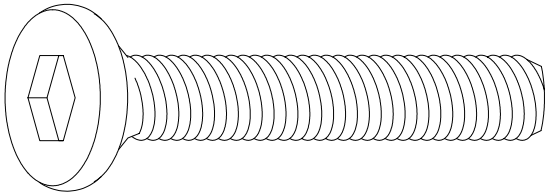

D. Allen Head Bolt

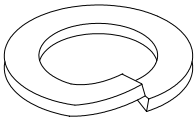

E. Lock Washer

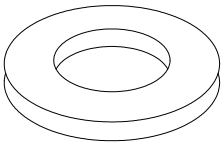

F. Flat Washer

1883967
Country Glen Demilune

Assembly Instructions

1. **Attach Front Legs (B)** Place the Top Assembly (A) upside down on a soft surface. Align the pre-drilled holes in the Front Legs (B) with the pre-threaded holes in the apron of Top Assembly (A). Make sure the pre-cut "L" opening faces outward. Secure with Allen Head Bolts (D), Lock Washers (E) and Flat Washers (F) using Allen Head Wrench (G). See Illustration.
2. **Attach Back Legs (C)** Align the pre-threaded holes in the Back Legs (C) with the pre-drilled holes in the corner blocks of Top Assembly (A). Make sure the pre-cut "L" opening faces inward. Secure with Allen Head Bolts (D), Lock Washer (E) and Flat Washer (F) using Allen Head Wrench (G). See Illustration.

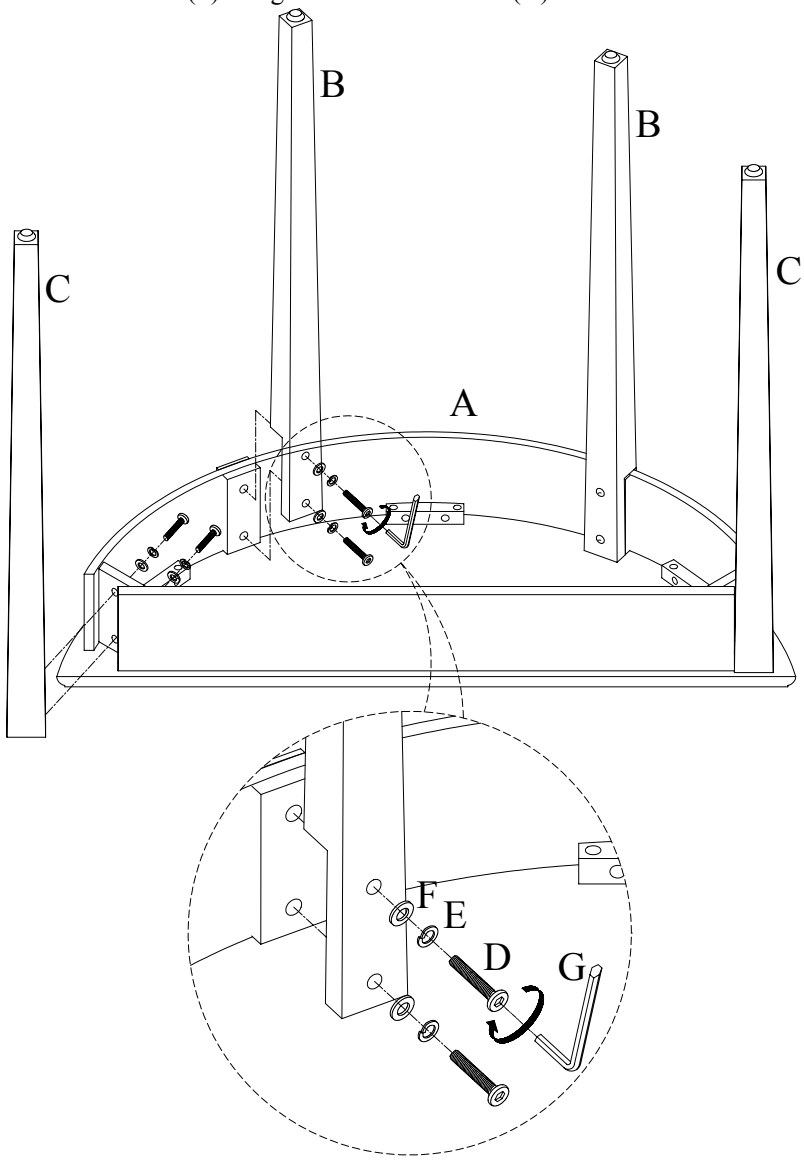

Illustration